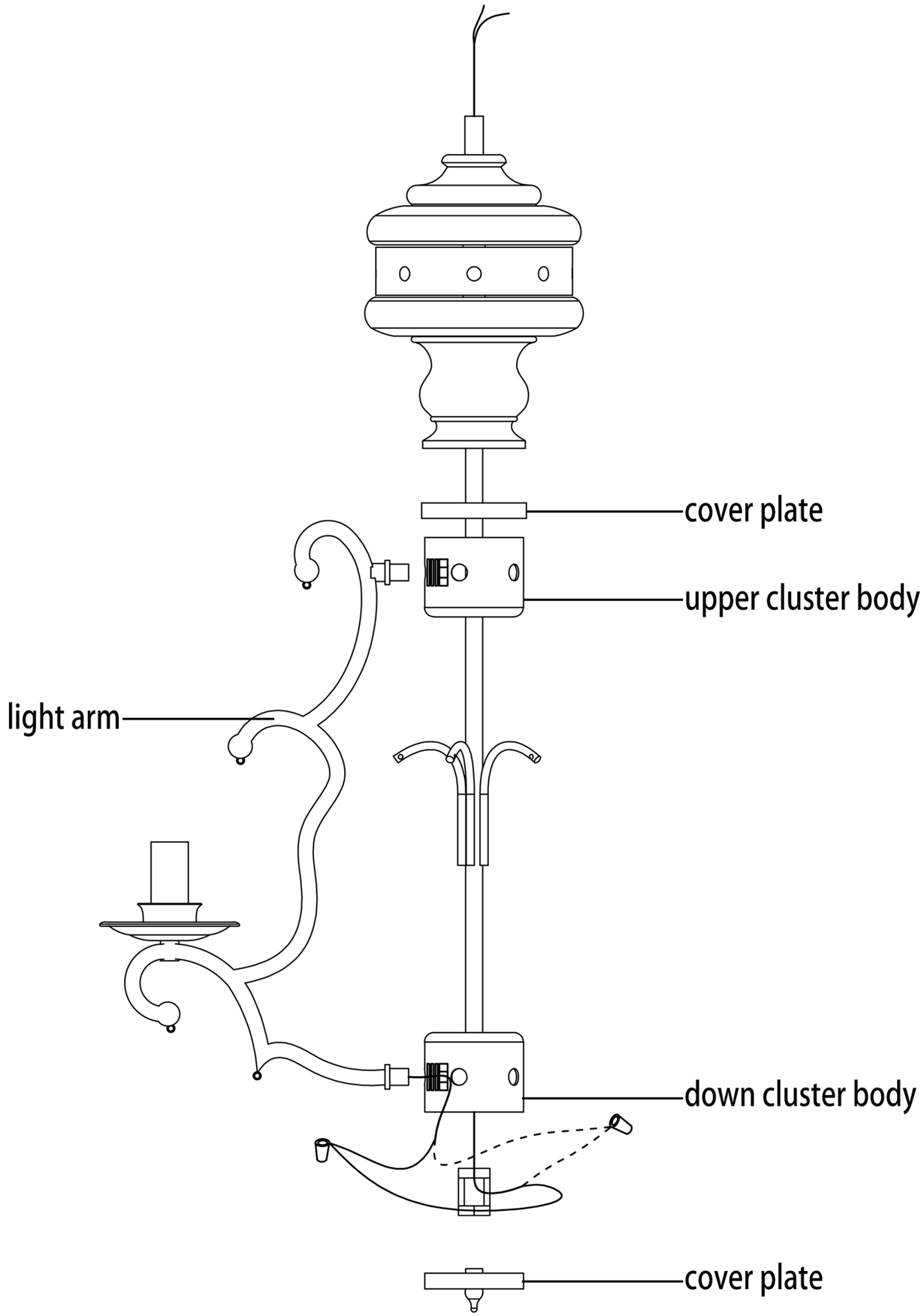

1. Shut off power before installation.
2. Remove the cover plate from the cluster body. Insert light arm with wires into the down cluster body and the upper end of light arm into the upper cluster body, fixing with washers and nuts.
3. Connect wires to wires matching their colors. Then, connect wire bundles with wire connectors to the corresponding main wire.
4. Put and secure the cover plate back onto the cluster body.

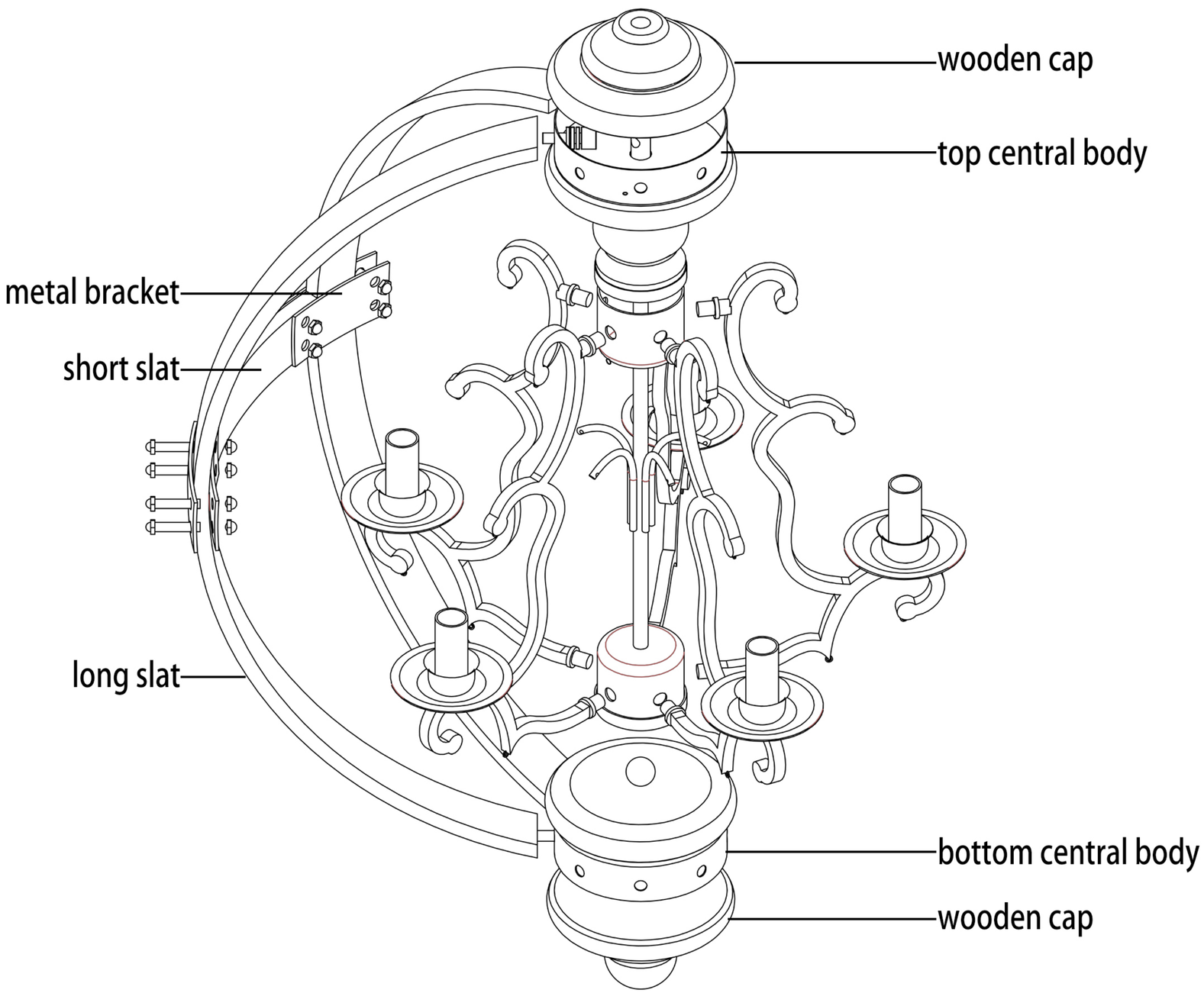

5. Remove the wooden cap from the central body. Install one end of the long slat to the top central body and the other end to the bottom central body, fixing with washers and nuts. Then, put and secure the wooden cap back on the central body.

6. Add a short slat between every two long slats. Place metal bracket on both sides of the long slat to secure short slat in place with screws and cap nuts.

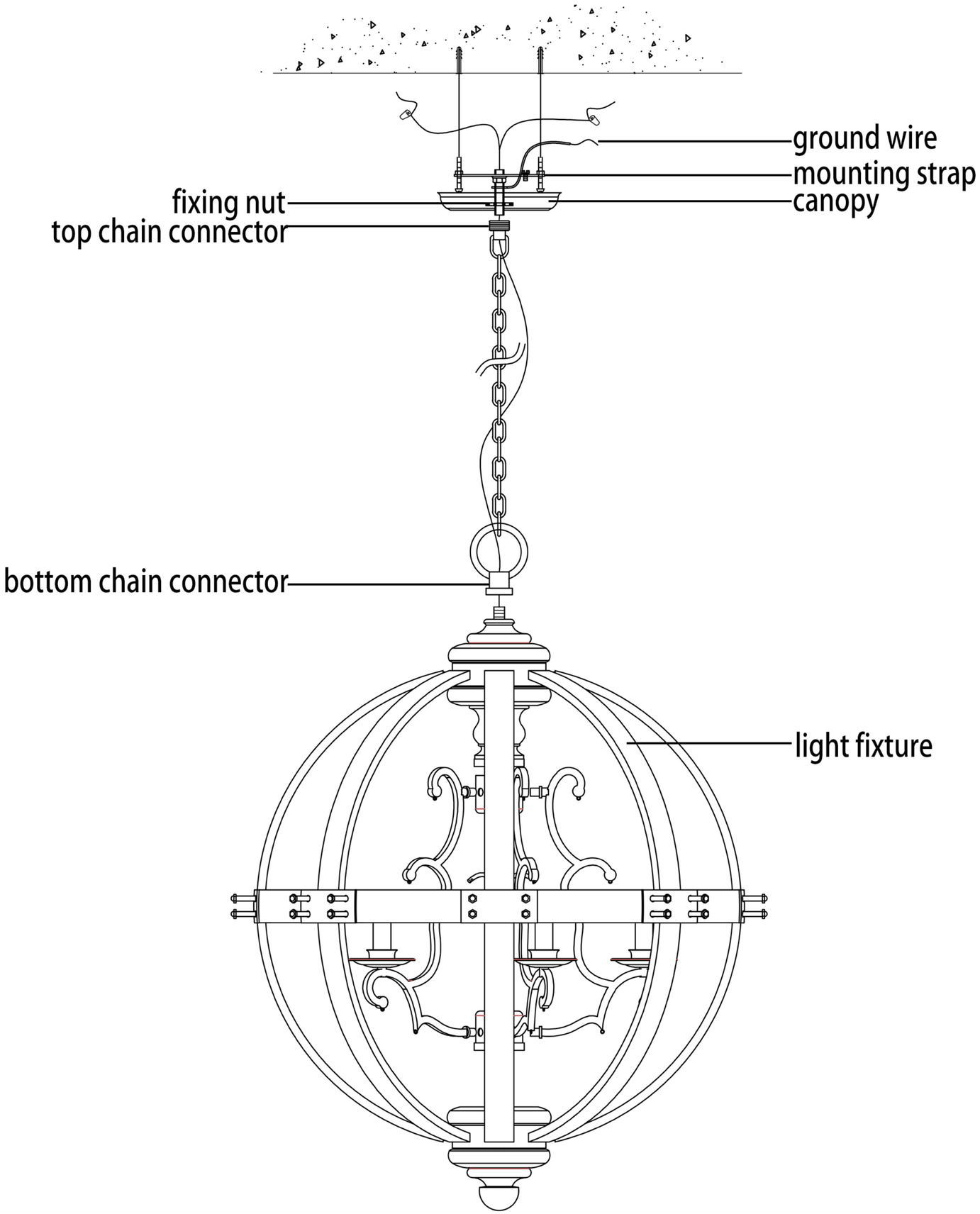

7. Fix the mounting strap to ceiling.
8. Feed main wire through the chain connectors, chain, and canopy.
9. Install the top chain connector onto the canopy with fixing nut. Screw the bottom chain connector onto the light fixutre.
10. Connect main wire with wire connectors to the corresponding wires in ceiling.
11. Attach the canopy to the mounting strap.

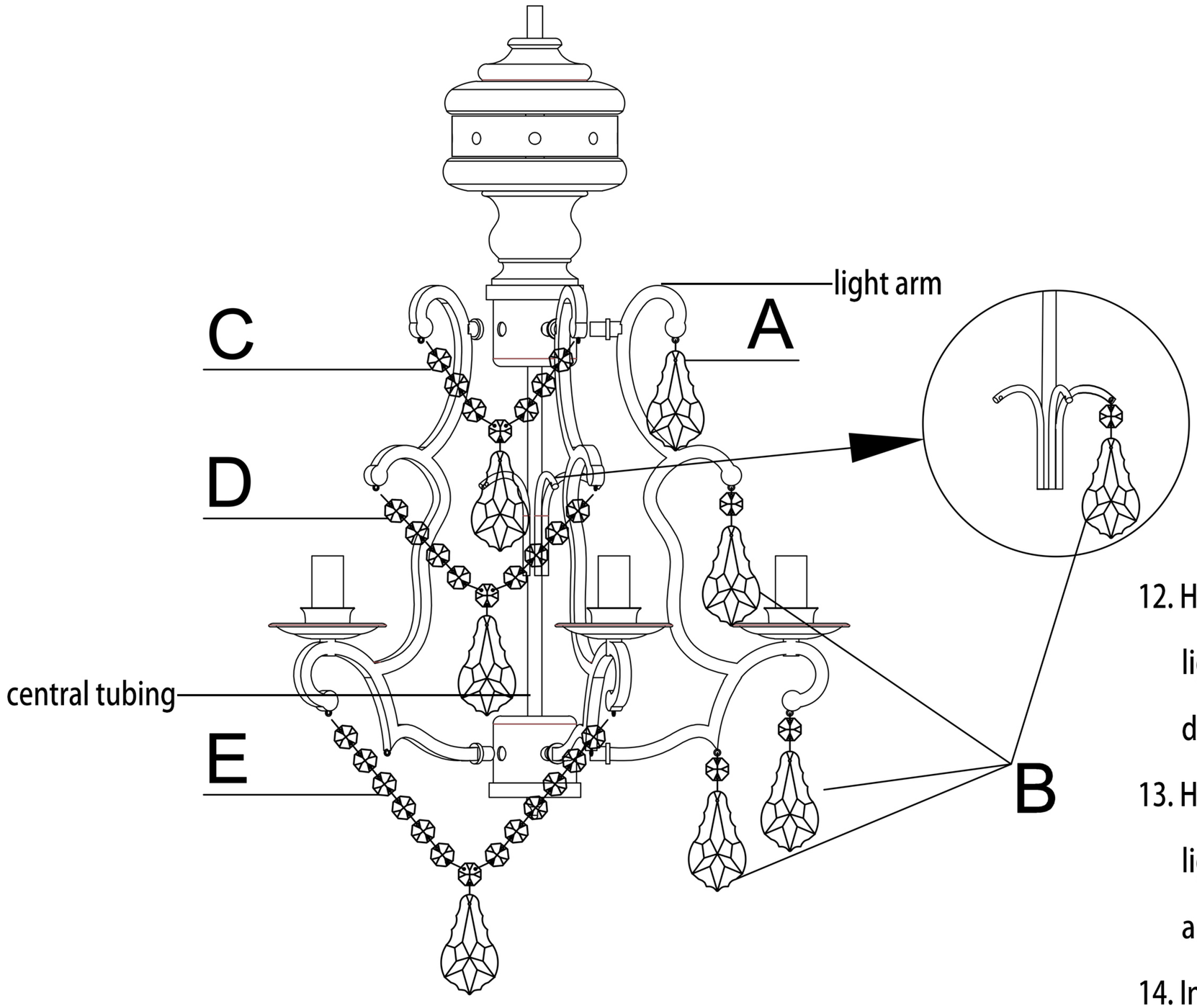

A:1*5=5 pieces

B:(1 bead +1 drop)*20=20 strings

C:(7 beads +1 drop)*5=5 strings

D:(9 beads +1 drop)*5=5 strings

E:(13 beads +1 drop)*5=5 strings

12. Hang crystals A and crystal strings B onto the light arms and central tubing according to the diagram.
13. Hang one end of crystal string (C, D, E) to one light arm and the other end to the next light arm as shown.
14. Install the light bulbs(not included with the light fixture) and turn on the power.