Chandelier Installation

Tools Required:

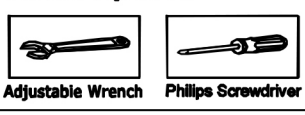

Adjustable Wrench Philips Screwdriver

Before Installation

1. Please read these instructions before assembling or installing the product. NOTE: Installati by a licensed electrian is recommended.
2. Take out the fixture and the mounting package and make sure all parts are included. If any part is missing or damaged, please contact us.
3. All parts must be used as indicated in these instructions. Do not substitute any parts, leave parts out, or use any parts that are worn out or broken.
4. Do not disassemble the main body, as it has been installed & commissioned correctly & precisely before leaving the factory.
5. IMPORTANT: Turn off the main power at the circuit breaker and place the wall switch or p chain in the "OFF" position.
6. Do not use bulbs with wattage greater than specified on this fixture.

Part List

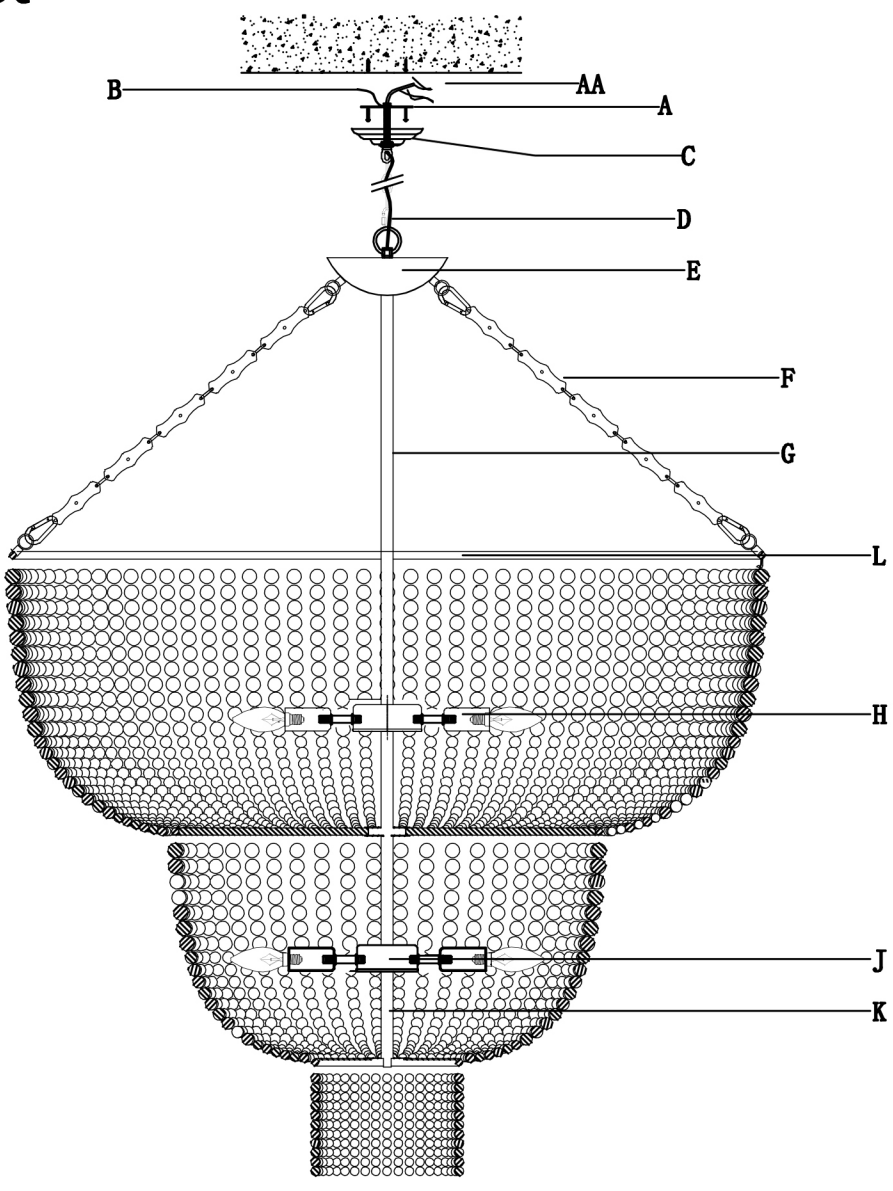

List of Part

Number	Diag ram	Name	Quantity
A	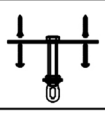	Mounting strap	1
B		Ground wire	1
C		Canopy	1
D		Chain	1
E		Center body	1
F		Metal chain	4
G		Hollow tube A	1
H		Cluster body A	1
I		Hollow tube B	1
J		Cluster body B	1
K		Hollow tube C	1
L	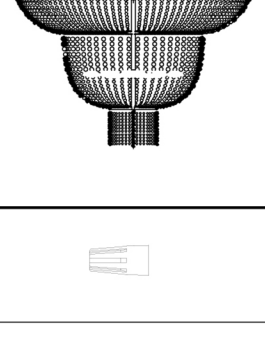	Ceramic bead strings	1
AA		Wiring cap	3

Chandelier Installation

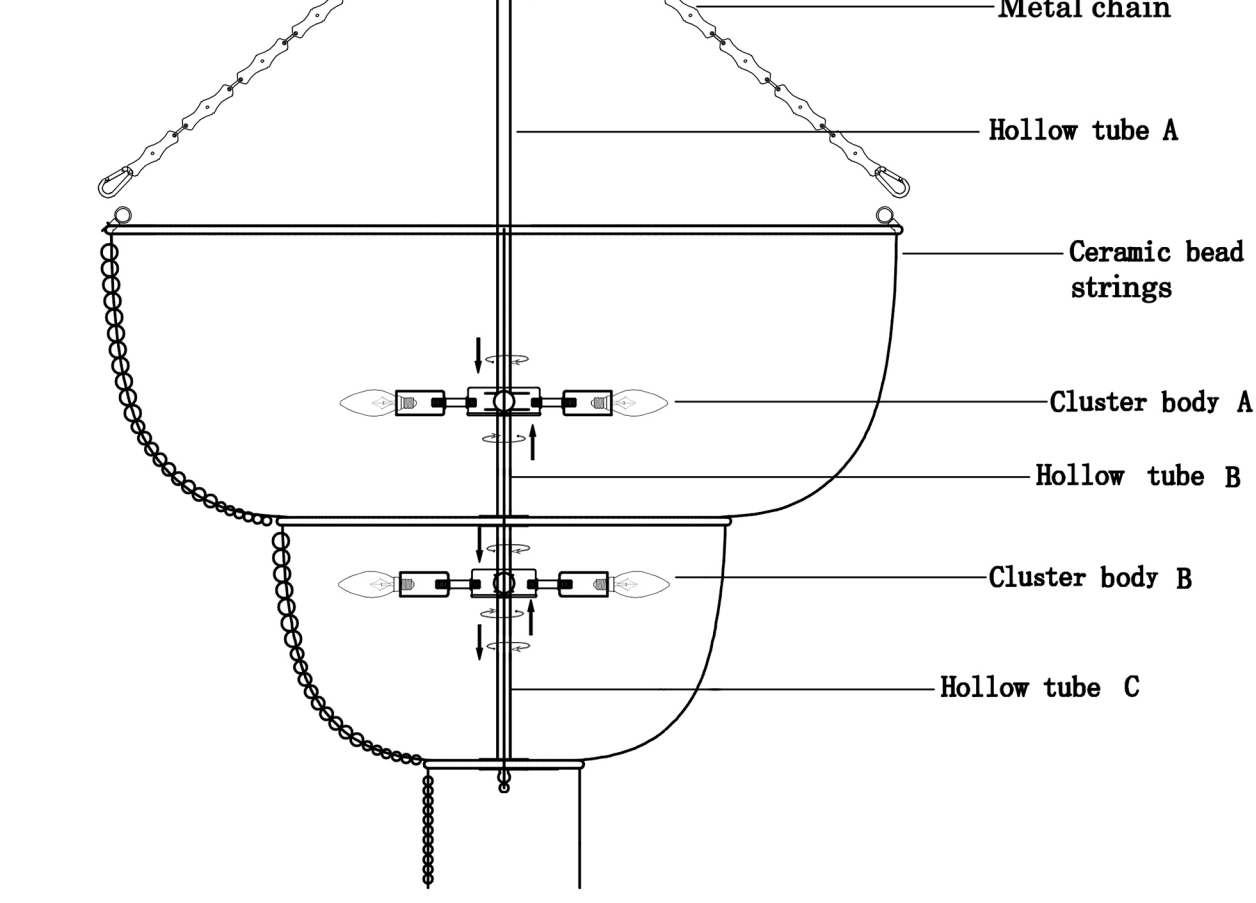

Chandelier Installation

Tools Required:

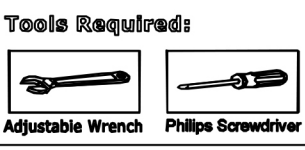

Adjustable Wrench Philips Screwdriver

1. Shut off power before installation.
2. Fix the mounting strap to ceiling.
3. Screw lamp holders to the cluster body (A, B) and fix with nuts. Insert long threaded rod A to the cluster body A and fix with nut, then screw the nut with side hole and insert the hollow tube A to the long threaded rod A.
4. Feed the main wires, then connect the main wires to the corresponding wires bundles with wire connectors.
5. Put on the cover plate, and screw the long threaded rod B and hollow tube B to the cluster body A. Attach the medium metal ring, cluster body B to the long threaded rod B, fixing with nut. Then connect the main wires to the corresponding wires bundles with wire connectors.
6. Install the cover plate, hollow tube C and small metal ring, tighten with ball final.
7. Feed the main wire through the center body, chain connectors and canopy. Tighten center body to the long threaded rod A with nut. Then put on the round plate and screw the bottom chain connector.
8. Hang the metal chains to the large metal ring and center body. Then hang the ceramic bead strings as shown.
9. Connect wires with wire connectors to the corresponding wires in ceiling.
10. Attach the canopy to the mounting strap and screw the top chain connector onto the mounting rod, fixing with lock nut.
11. Screw in light bulbs (not included with the light fixture).
12. Turn on the power and test.