Installation Instruction

Before You Begin

1. Shut off the main water supply.
2. Do not disassemble the main body, as it has been installed & commissioned correctly & precisely before leaving the factory.
3. To avoid the faucet from jamming, DO flush the water pipe before installation.
4. After installation, make sure every joint is safely sealed (NO LEAKAGE).
5. Make sure to connect the hot/cold inlet pipe correctly, if standing in front, hot water pipe connecting to the left and cold water pipe connecting to the right.
6. It is recommended that installation of the product be done by a professional plumber.

Cleaning & Maintenance

To keep product clean and shiny follow the instruction below.
1. Flush with clean water and dry with soft cloth only.
2. Do not use any detergent, polisher, sane-cloth, or a scraper.
3. Do not use acid detergent.

Installation

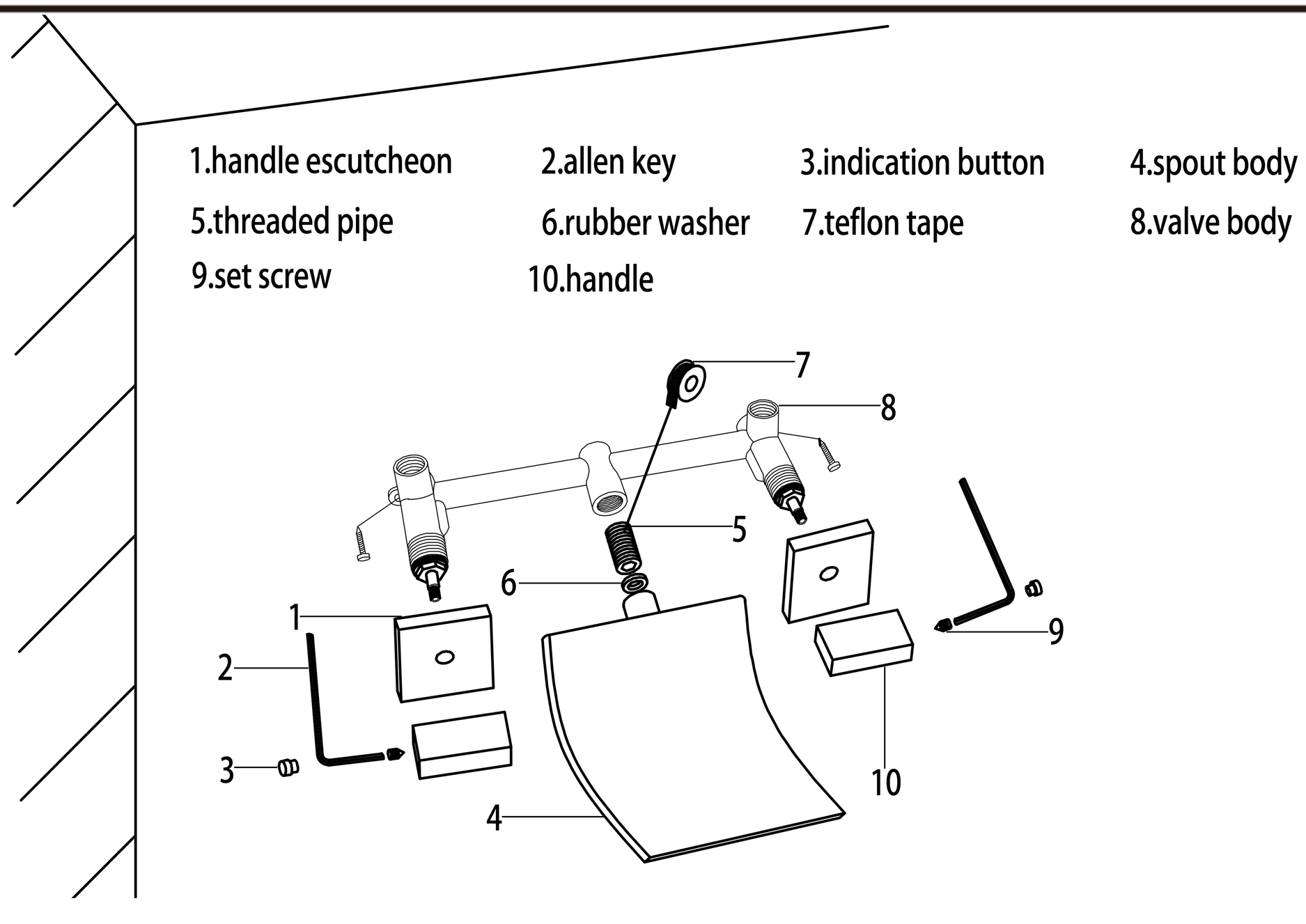

1. Fix the valve body into the wall with screws. Make sure the valve body is completely level.
2. Connect the hot and cold water inlets of the valve body to the main water supply. (Solid copper pipes are recommended for the connection.)
3. Apply teflon tape to the threaded pipe and screw it into the valve outlet. Then,put rubber washer to the spout body and screw the spout body into the threaded pipe.
4. Fix the handle escutcheon onto the valve firmly against the finished wall. Install the handle to the valve, then tighten the set screw with allen key and place indication button on handle.