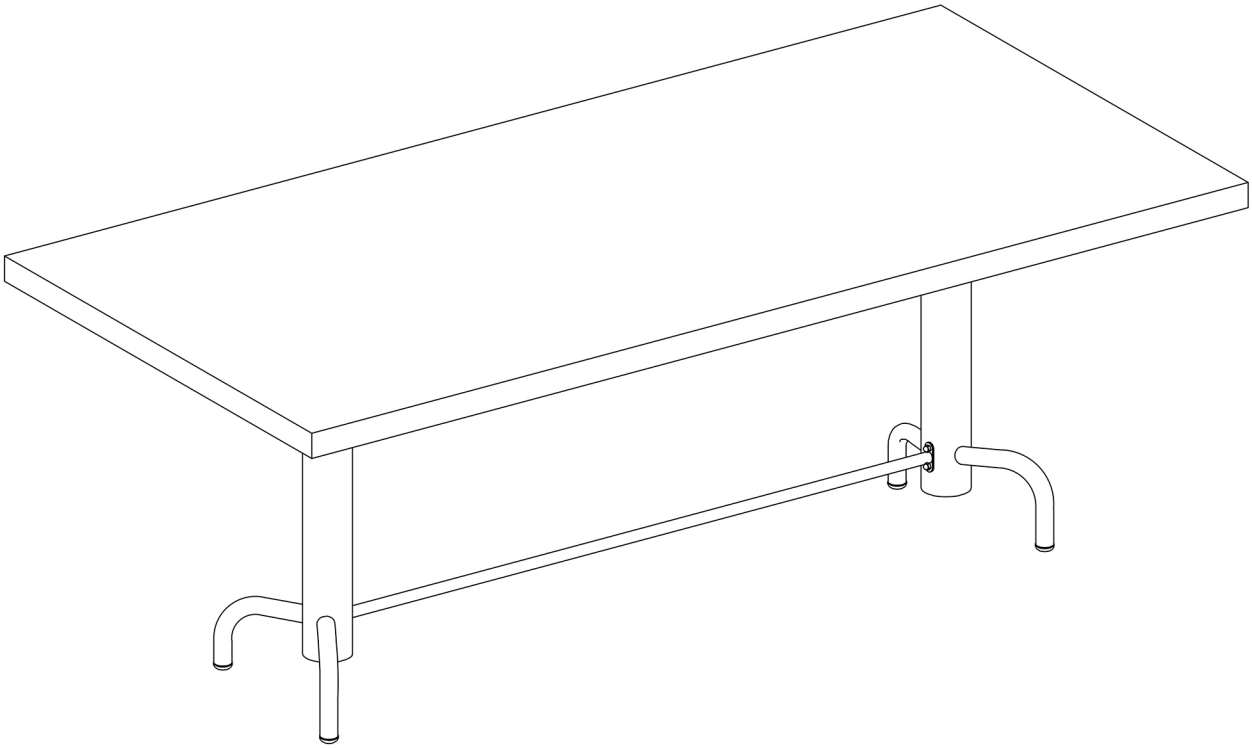

Dining Table Installation

INSTALLATION MANUAL Tools You Will Need:

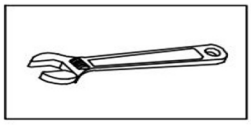
Adjustable wrench

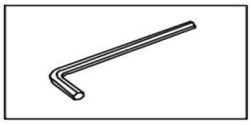
Hexagon wrench

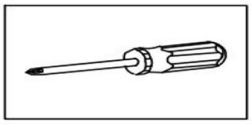
Philips Screwdriver

Before the Installation

1. Do not throw away packing materials until assembly is complete for small parts may come loose inside the carton during shipment. If parts are missing, please contact us.
2. Assemble this item on a soft surface, such as carpet to protect the finish.
3. Proper assembly of this item requires 2 people.
4. Periodically check to ensure that all connections are tight.
5. It is recommended that installation of the product be done by a qualified licensed plumber.

Care and Cleaning

1. To protect the finish, avoid use chemicals and household cleaners.
2. All hot serving dishes should be placed on a pad.
3. Any liquid spilled onto the top should be cleaned up immediately with a damp cloth.

Parts List

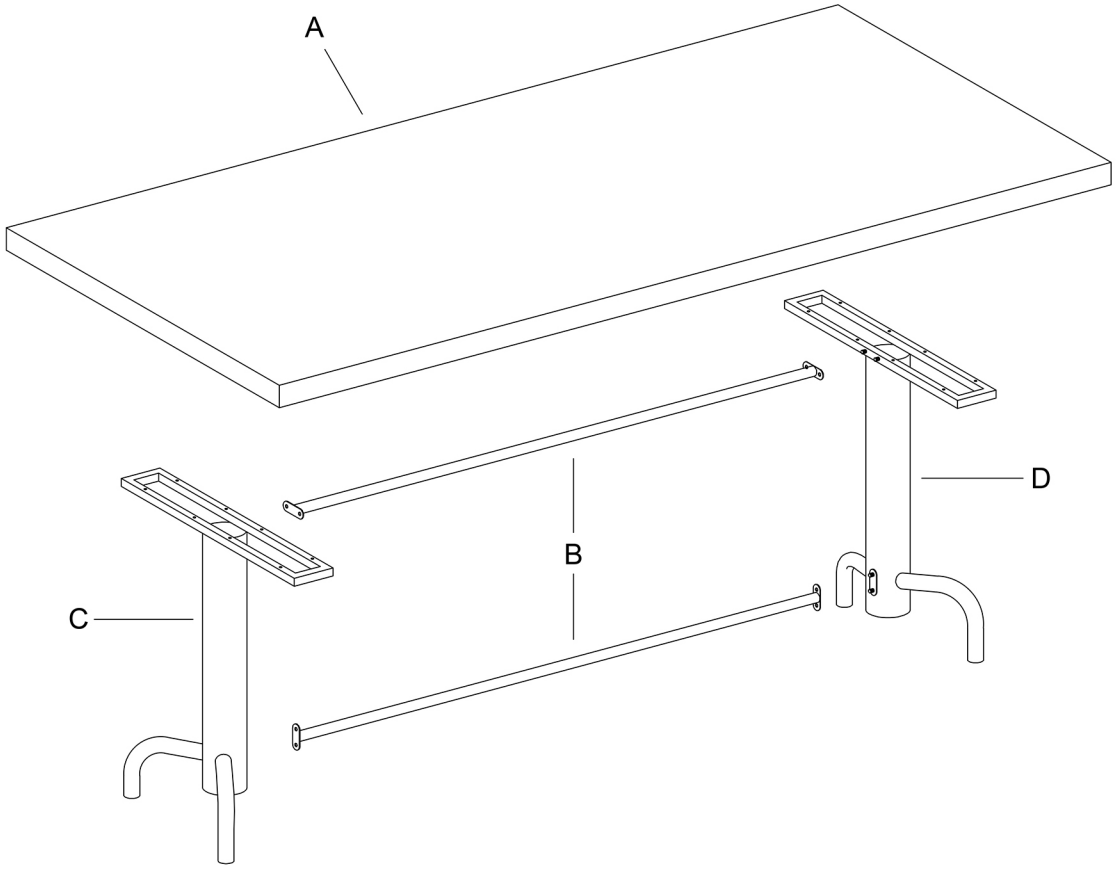

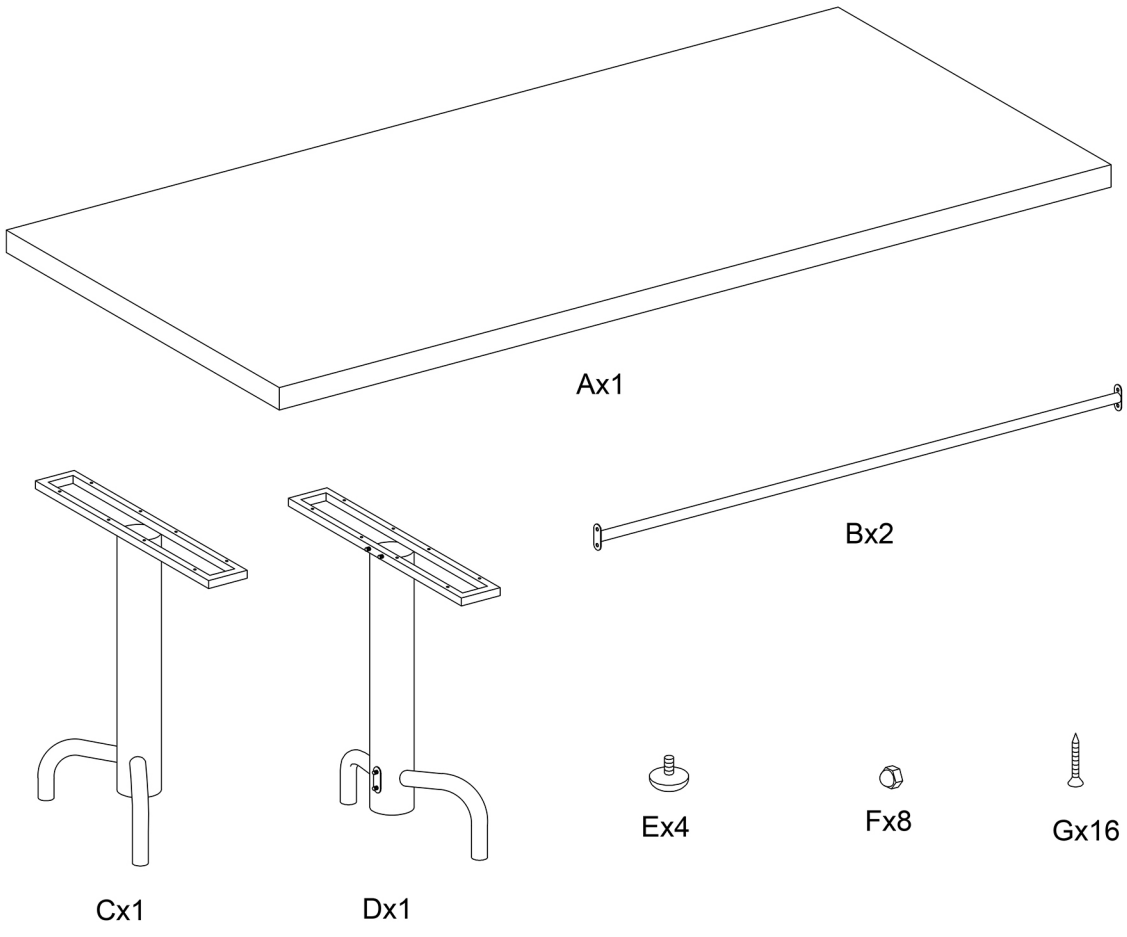

Step 1

E x4

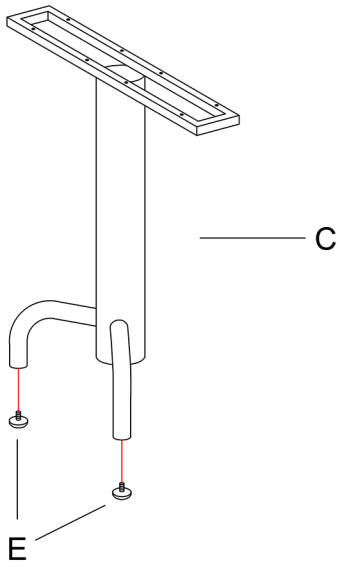

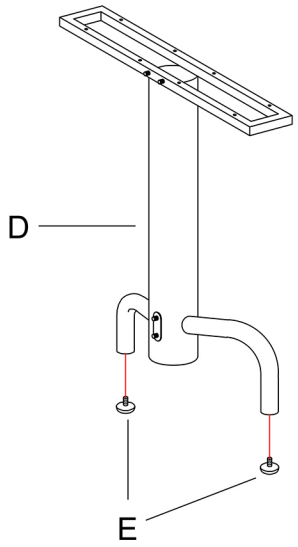

Step 2

F x8

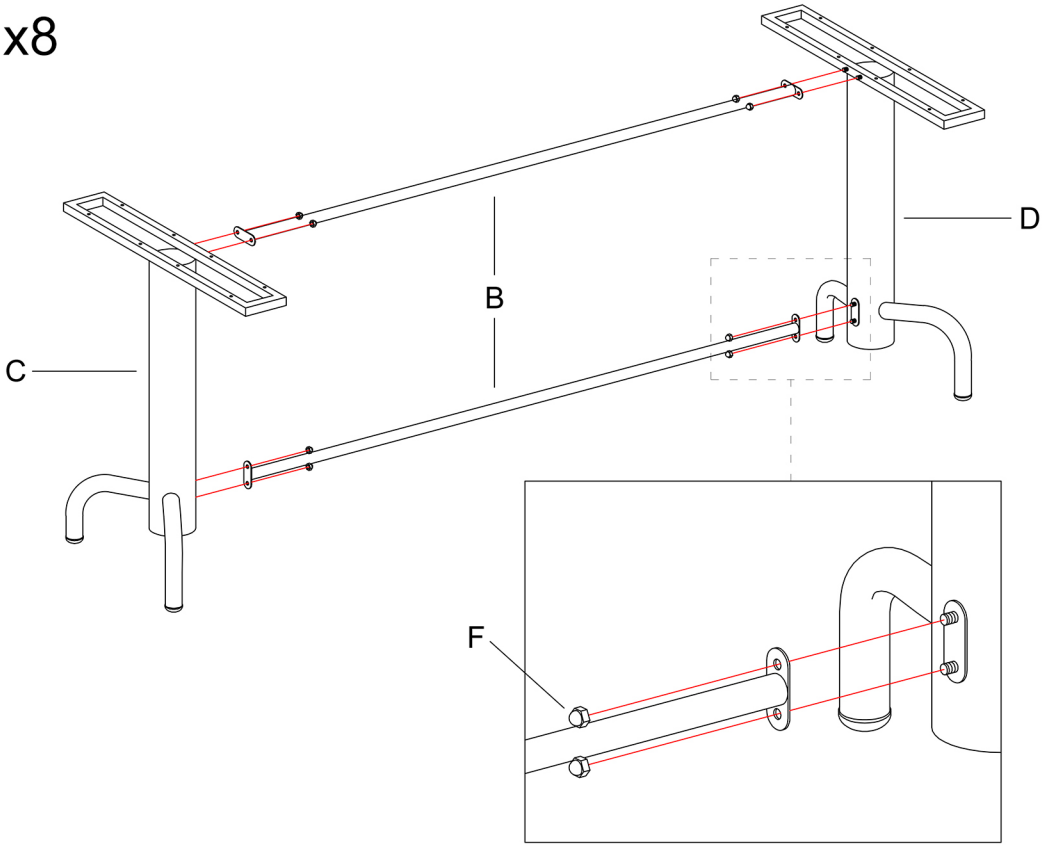

Step 3
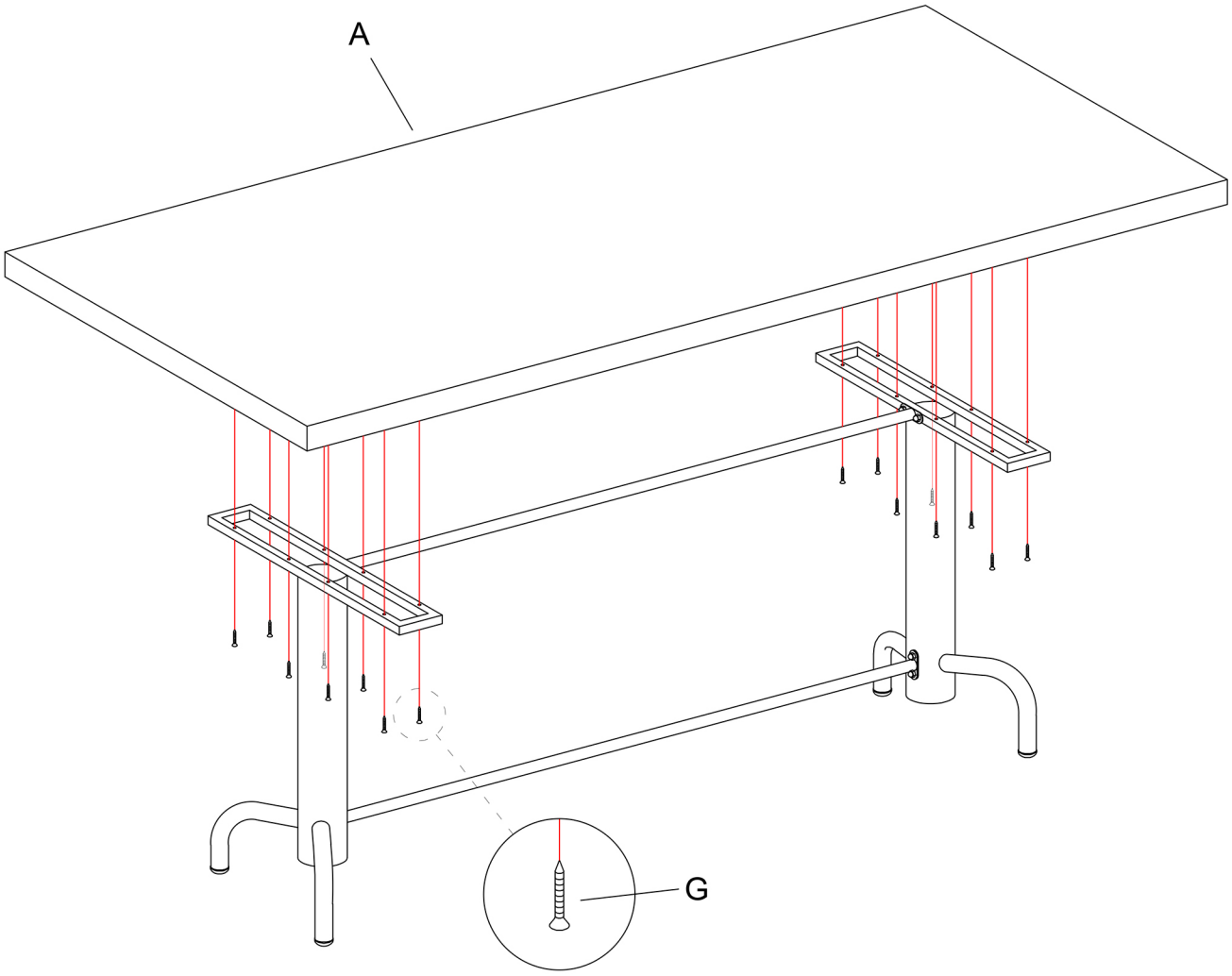
G x16